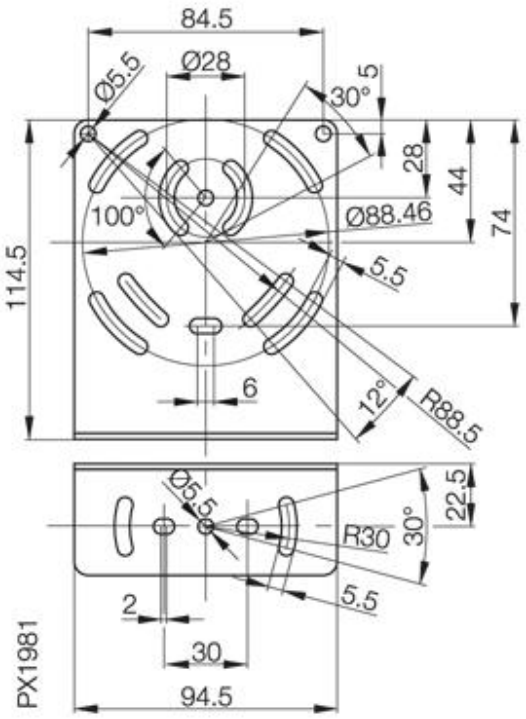

Accessories: Mounting unit BOD 63-HW-1

Common Data

Version	Bracket
Usable with	for Optosensors series BOD 63M

Mechanical Data

Measurements WxHxD or Dia x D	94,5x114,5x40
Material	sheet steel St W 22
Mounting	screws

Datasheet number::

Definitions see general catalog.
If not otherwise noted, ratings according to
IEC 60947-5-2 (DIN EN60947-5-2)

Balluff GmbH
Schurwaldstrasse 9
73765 Neuhausen a.d.F.
Phone (07158) 173-0 Fax (07158) 5010

BALLUFF
sensors worldwide